Manual

piCOBOT® L High Payload General

Air driven ejector unit for vacuum grippers

piab

This manual is available in the following languages at piab.com

The original manual is written in English.

中文

English

Français

Deutsch

Italiano

日本語

한국어

Polski

Português (Brasil)

Русский

Español

Svenska

Copyright © 2026 Piab AB

Specifications subject to change without notice.

Table of Contents

1. Introduction to the manual 4
1.1. About the manual 4
1.2. Safety signs used in the manual 4
1.2.1. Warning signs 4
1.2.2. Mandatory signs 4
1.3. Target group 5
1.4. Test conditions 5
2. Safety instructions 6
2.1. Disclaimer 6
2.2. General safety 6
2.3. Safe usage 6
2.3.1. Installation 7
2.3.2. Maintenance 7
2.4. Risk assessment 7
2.5. Intended use 7
2.6. Misuse 8
3. Introduction to the piCOBOT® L HP 9
3.1. Manufacturer 9
3.2. Identification label 9
3.3. Compliance 9
3.4. Overview 11
4. Installation 12
4.1. What's in the box 12
4.2. Mechanical installation 12
4.3. Electrical Installation 14
4.3.1. Pin configuration - installation 15
4.4. Pneumatic installation 16
4.4.1. Pneumatic information 16
4.4.2. Pneumatic diagram 17
5. Operation 18
5.1. Interface 18
5.2. Blow-Off flow 20
5.3. Menu overview piCOBOT® L HP General 21
5.4. Menu settings 22
6. Functions 25
6.1. Parametrization and configuration 25
6.2. Supervision 31
6.3. Pin configuration 32
7. Maintenance 34
7.1. Preventive maintenance 35
7.2. Spare parts 36
7.3. Dismounting of chip 36
7.4. Cleaning of compressed air filter 38
7.5. Troubleshooting 39
7.6. Accessories 40
8. Technical Data 41
9. Dimensions 42
9.1. 1-2 COAX® 42
9.2. 3-4 COAX® 43
9.3. Adapter plates 44
10. Warranty 45
11. Recycling and disposal 46

1. Introduction to the manual

1.1. About the manual

- The responsible party for the production site must ensure that this manual will be read and understood.
- The section on safety should be studied extra carefully.
- The manual should be stored in a known and easily accessible place, which can be digital.
- Before doing service and maintenance on the equipment, carefully study the applicable parts of the manual.

This manual (Art no. 0256729, Rev.01, en-GB, 2026-05) is for piCOBOT® L HP General.

1.2. Safety signs used in the manual

Take note of all the warnings, mandatory, and other signs in this manual. They have the following meanings:

1.2.1. Warning signs

Warning
Failure to follow the instructions may result in death or serious injury!

Warning
Vacuum force

Warning
Exhaust

Warning
Do not restrict exhaust

1.2.2. Mandatory signs

Notice
Information that needs extra attention!

Important
Wear eye protection

Important
Wear ear protection

1.3. Target group

This manual, especially the section about safety, shall be read by all staff who will perform any type of work with the product or equipment:

- Installation personnel
- Operating personnel
- Service and maintenance personnel
- Cleaning personnel (cleaning of equipment and the area around it)

1.4. Test conditions

Unless otherwise stated, the values specified in this manual are tested at:

- Room temperature: (20°C [68°F] ± 3°C [5.5°F])
- Standard atmosphere: (101.3 kPa [29.9 inHg] ± 1.0 kPa [0.3 inHg])
- Compressed air quality: DIN ISO 8573-1 class 4.

2. Safety instructions

2.1. Disclaimer

Piab AB is not responsible for installation and operation of piCOBOT® L HP in a robot system. The required steps must be undertaken in supervision and approval by authorized integrators.

Piab AB is not responsible for safety of a complete robot system with piCOBOT® L HP installed. The required steps must be undertaken in supervision and approval by authorized integrators.

2.2. General safety

The correct use of the product within a system is the responsibility of the system designer or person responsible for the technical specifications.

Compressed air may lead to an explosion of closed containers, and vacuum may lead to the implosion of closed containers.

In case of evacuation of hazardous substances and/or gases the exhaust flow must be contained and properly treated.

Ensure that components are properly secured; regularly check that connections are in good working order, as high cycles or vibrations may cause them to loosen.

2.3. Safe usage

The product described in this manual is designed for implementation in industrial systems; therefore, it must not be used under conditions other than those specified herein.

Warning
Vacuum and exhaust air can cause severe injuries. Keep hands, legs, hair, and eyes away from vacuum inlets and exhausts.

Warning
Ensure that no foreign matters or objects enter the vacuum port or exhaust port, due to the risk of ejected objects and/or damage to the product.

Warning

- Ensure that the compressed air line is properly secured to avoid personal injury, equipment damage, and/or application failure.
- The use of a damaged product may result in bursting and cause injury or property damage.
- Irresponsible use of compressed air may cause injury. Compressed air must never be used for anything else than designated purposes.
- Risk of ejected objects, damage to the product, application failure, and/or personal injury if the vacuum and exhaust ports are simultaneously blocked while generating vacuum.

2.3.1. Installation

Compressed air may be dangerous if used by unskilled personnel. Installing, using, and maintaining the product should solely be carried out by experienced and specially trained personnel.

Prior to assembly and disassembly of the product, turn off electrical supply and compressed air supply. Install and maintain the product only after thoroughly reading and understanding this manual.

2.3.2. Maintenance

Warning
Prior to any maintenance work, turn off the compressed air supply and electrical supply, and discharge residual pressure.

Maintenance must only be carried out after thoroughly reading and understanding this manual.

2.4. Risk assessment

The integrator must perform a risk assessment on the complete robot application. The piCOBOT® L HP is only a component in a robot application thus the safe use of the piCOBOT® L HP relies on the integrator's ability to design a safe robot application. The piCOBOT® L HP is designed with features especially suitable for collaborative applications, such as:

- Compact design to minimize the footprint of the product in limited working spaces.
- Low weight to reduce the impact inertia.
- Large surface area-to-volume ratio, to reduce the impact inertia (pressure).
- Small build height (tool center point close to robot flange) reduces the force exerted on the robot joints during motion.
- Rounded edges.
- Intuitive installation of the pump unit to the robot interface.
- Sufficient number of fasteners for all attachment interfaces to ensure mechanical integrity.
- Captive attachment fasteners with round screw heads.
- Swivelling air supply connection to avoid entanglement of the air hose.
- Straps for securing air hose to avoid entanglement with other objects and/or robot body.
- LED lights on the product for indicating different operational states in different colors that allows for corrective actions being taken, away from the hazardous area.
- Exhaust air outlet direction designed to minimize the risk of blowing into the eyes of operator.

2.5. Intended use

- For professional use only.
- The product shall be used in environments within the product's specifications and certifications.
- The product shall be used to evacuate air (non-liquids) from a volume to create vacuum for gripping, holding, and lifting processes.
- The piCOBOT® L HP is an end-of-arm tooling on collaborative robots, used for gripping and holding objects. Typical applications are:
  - Pick-and-place
  - Top loading
  - Machine tending
  - Bin picking
  - Order fulfillment
  - Assembly

- Palletizing
- Depalletizing

2.6. Misuse

The product is only cleared for operation under the conditions stated in this manual and in the datasheets. Any use or application deviating from the intended use is deemed to be impermissible misuse. This includes, but is not limited to:

- Use of product that is damaged.
- Use of the product for evacuating liquids.
- Use of compressed air or electrical voltage outside the specification.
- Use of the product as a standalone safety unit to fulfil international lifting standards.
- Use of the product to evacuate solid content without the use of a filter.
- Use of the product if the compressed air line is not properly secured, as loose compressed air lines can cause severe injuries.
- Use of the product if the exhaust is restricted or blocked.
- Use of the product if the vacuum and exhaust port are simultaneously blocked when the unit is generating vacuum.
- Use of the product in direct contact with water spray or excessive amounts of water.
- Use of the product in potentially explosive atmospheres.
- Use of the product in life-critical applications.

3. Introduction to the piCOBOT® L HP

3.1. Manufacturer

Piab AB
P.O. Box 146
SE-182 12 Danderyd
SWEDEN

3.2. Identification label

Each unit is identified by a label with identification information. For any communication with Piab AB or service centers always refer to the label information and state both the Product code and Serial number.

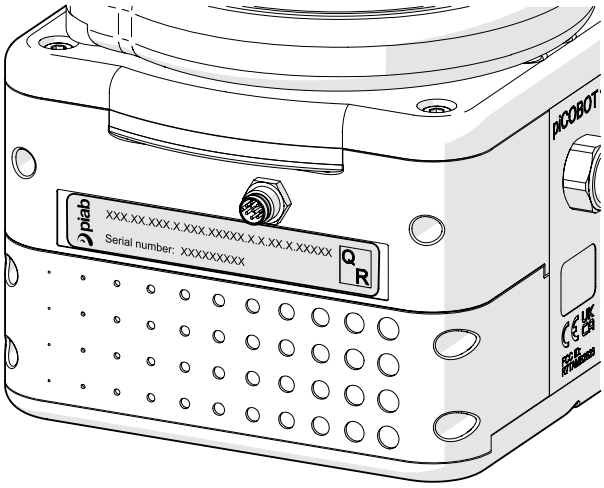

3.3. Compliance

CE

European Directives, CE	
Directive	**Standard and/or measurement reference**
Electromagnetic Compatibility (EMC) Directive 2014/30/EU	EN/(IEC) 61000-6-2:2019 EN/(IEC) 61000-6-4:2019
RoHS2 Directive (2011/65/EU)	Compliant

Federal Communications Commission, FCC

FCC ID	R7TAMB2623

3.4. Overview

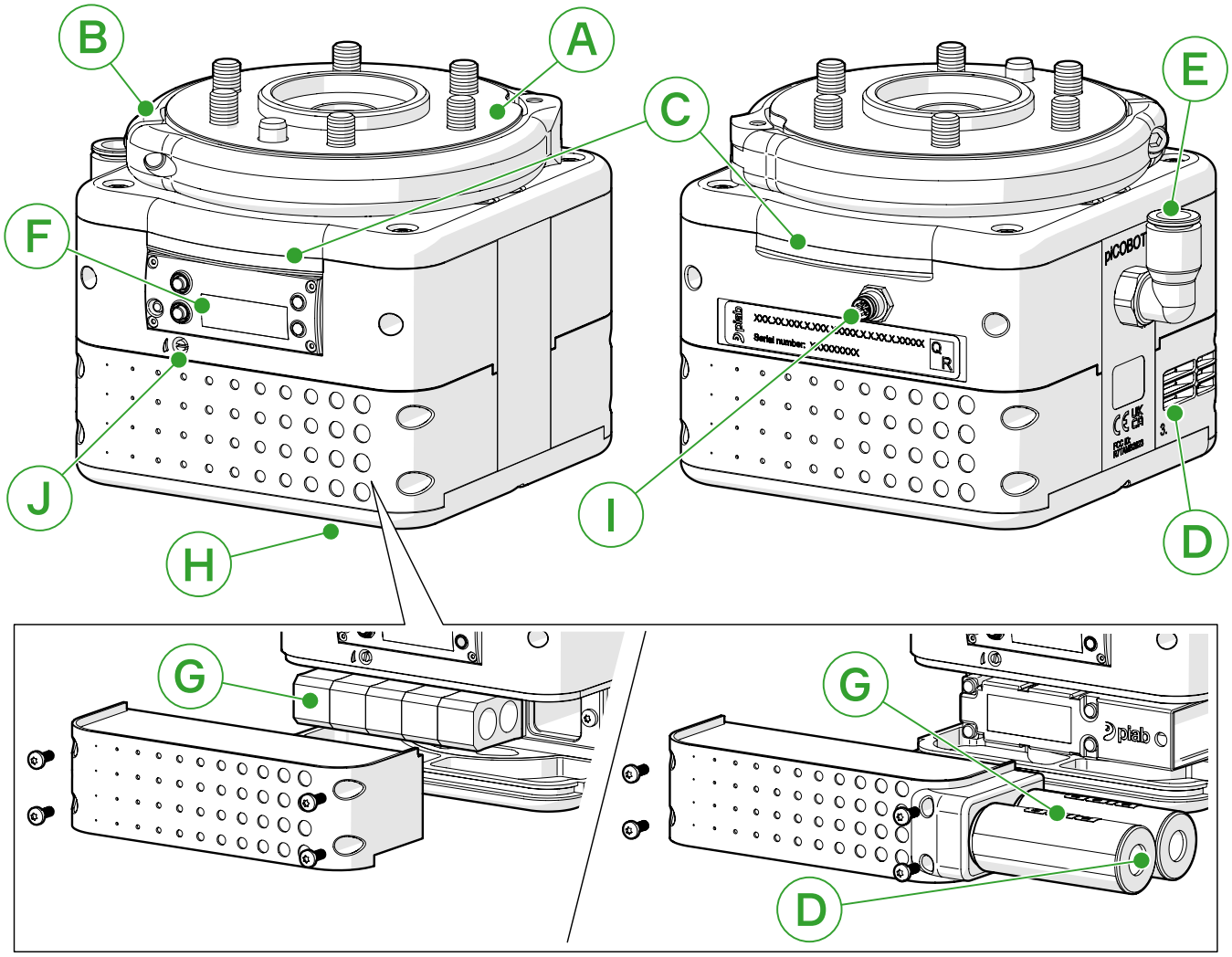

Position	Description	Note
A	Adapter plate	Adapter plate for robot
B	Clamp ring	-
C	LED indicator	See chapter Operation
D	Exhaust	Exhaust air
E	Feed pressure inlet	Angled push-in style; ø6, ø8, ø10 or 2xø10 mm
F	OLED display and select buttons	See Interface section
G	Silencer	Internal silencer for pumps with 1 or 2 COAX® cartridges. External silencer for pumps with 3 or 4 COAX® cartridges.
H	Vacuum port	G1/2” Female
I	Electrical connection	Connector M8 8-pin Male
J	Blow-Off screw	Adjustable Blow-Off flow

4. Installation

Warning

- Do not install or operate your piCOBOT® L HP if damaged during transport, handling, or use. A damaged product may result in bursting and cause injury or property damage.
- Before using the product, read the safety instructions to ensure a safe product operation.

4.1. What's in the box

- piCOBOT® L HP General
- Air hose ø6, ø8 or ø10 mm outer diameter, length 3 or 6 m
- Straps for cable/tubing
- Torx keys (T10)
- Hex keys (3, 4, 5 mm)
- Cable M8 8-pin Female Angled to Open end, length 3.0 m
- piCOBOT® L HP General manual
- Foam gripper (optional)

4.2. Mechanical installation

1. Unpack the box.
2. Use a Hex key (5 mm) to open the clamp ring and release the adapter plate from the pump.
3. Attach the adapter plate to the robot with four M6 screws (for the ⌀50 mm adapter plate) or six M8 screws (for the ⌀80 mm adapter plate).

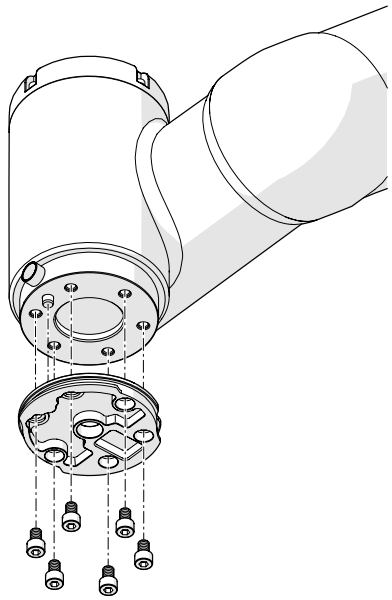

Figure 1. Adapter plate is attached to a robot with 4 or 6 screws and a guiding pin.

4. Fasten the piCOBOT® L HP to the adapter plate with the clamp ring. Lock the closed clamp ring with an M5 screw using a Hex key (5 mm). Do not overshoot the maximum torque of 3.0 Nm [2.2 lb-ft].

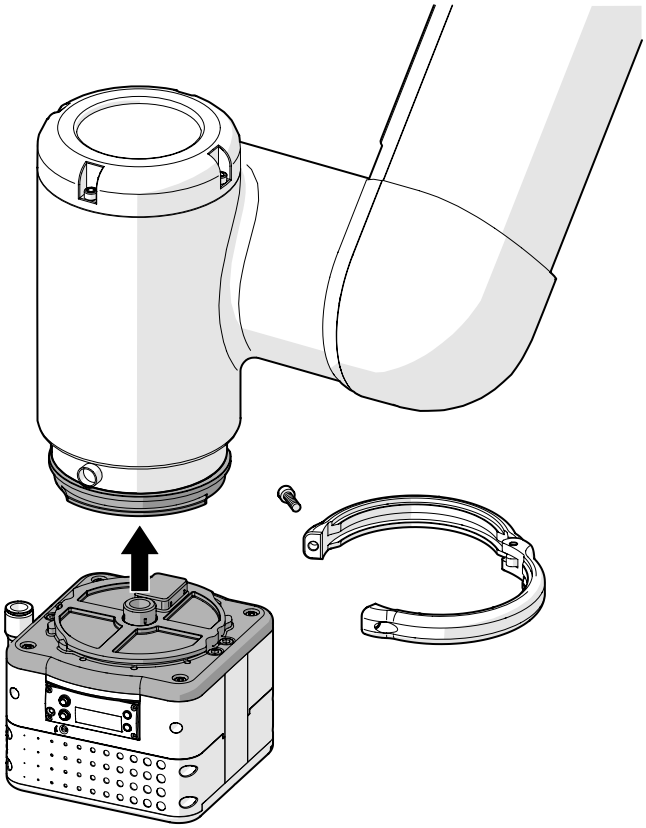

Figure 2. Attach the piCOBOT® L HP to the robot with the clamp ring.

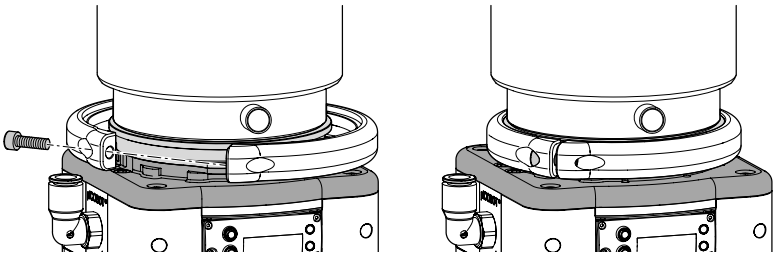

Figure 3. Lock the clamp ring.

5. Mount a gripping tool, such as a foam gripper, or a suction cup, to the piCOBOT® L HP.

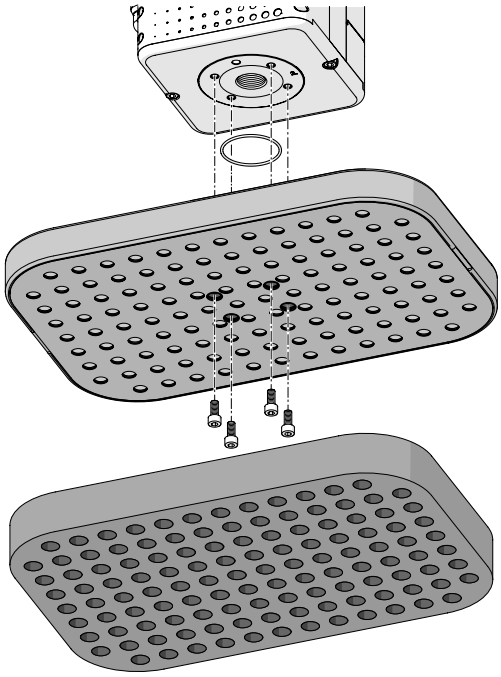

Figure 4. Foam gripper mounted on piCOBOT® L HP.

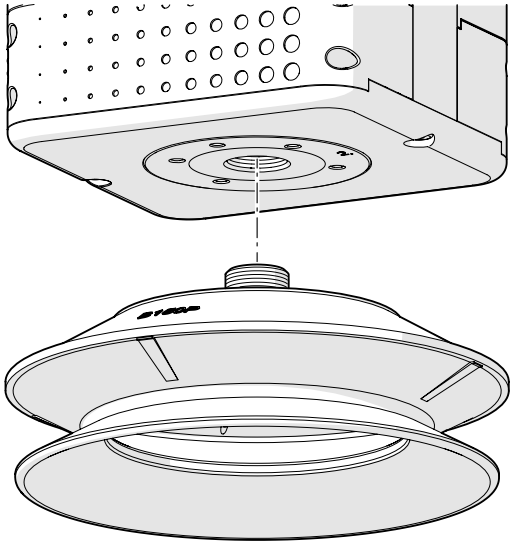

Figure 5. Suction cup mounted on piCOBOT® L HP.

The Tool side of the piCOBOT® L HP has two different mounting interfaces, this enables fastening different grippers or suction cups:

B - Interface 30x40 mm, 4 x M5

For more information see chapter Dimensions.

4.3. Electrical Installation

Mount the electrical cable on the piCOBOT® L HP and on the robot, note the guide notch for the right direction.

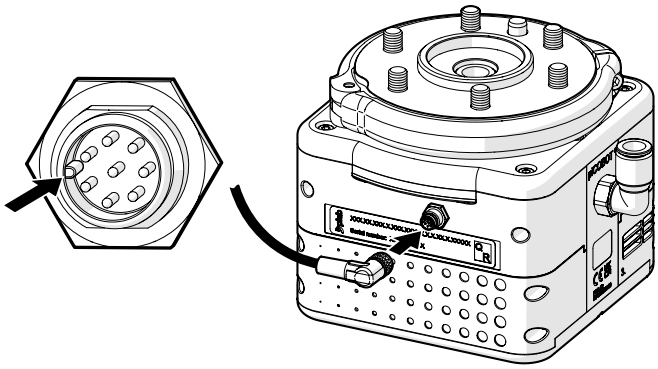

Figure 6. Guide notch on the electrical connector

4.3.1. Pin configuration - installation

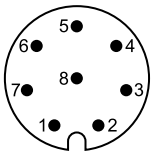

M8 8-pin male

Pin no	Color	Name	Description	Note
1*	White	V2	1 = Blow-Off control	Digital input Valve 2 control or C2 control functions
2*	Brown	S2**	1 = Energy Saving vacuum level achieved (ES) 3 = Leaking Warning (LW) 5 = Analog output. 1-5 VDC	Digital output Signal 2*
3*	Green	C2	1 = Disable Energy Saving (ES)	Digital input Control 2
4*	Yellow	V1	0 = Vacuum control	Digital input Valve 1 control or C2 control functions
5	Grey	Vsys	Supply voltage, 24 VDC (V+)	-
6*	Pink	C1	Invert interpretation of pump I/O, connect pin 6 to pin 8 to go from PNP to NPN or from NPN to PNP.	Digital input Control 1
7*	Blue	S1**	1 = Part present vacuum level achieved (PP)	Digital output Signal 1*
8	Red	GND	Common, 0 VDC (V-)	-

Pin 1-4 and 7 can be configured in the menu system to do other functions, see chapter Functions for more information.

* Different operating alternatives depending on the piCOBOT® L HP configuration.

** S1 and S2 can deliver 2x40mA simultaneously or 1x80mA one at a time.

S2 offers different preset values depending on the configuration.

4.4. Pneumatic installation

Warning
Ensure that the compressed air line is properly secured to avoid personal injury, equipment damage, and/or application failure.

piCOBOT® L HP can be installed in any orientation. Ensure that the exhaust from the ejector is not blocked. When connecting compressed air and vacuum hoses to the unit, it is important to choose proper hose dimensions, if using other hose than included, to prevent pressure drop. Avoid restrictive inner diameters, long piping distances, sharp bends, and small sized connections.

Connect the air hose to a supply of compressed air and to the piCOBOT® L HP.

Secure the air hose with straps to avoid entanglement with other objects and/or robot body.

4.4.1. Pneumatic information

Number and type of COAX®	Feed pressure, max. MPa [psi]	Feed pressure, optimum MPa [psi]
1 x SX12	0.7 [101.5]	0.50 [72.5]
2 x SX12	0.7 [101.5]	0.50 [72.5]
3 x SX12	0.7 [101.5]	0.53 [76.9]
4 x SX12	0.7 [101.5]	0.53 [76.9]
1 x SX42	0.7 [101.5]	0.45 [65.3]
2 x SX42	0.7 [101.5]	0.50 [72.5]
3 x SX42	0.7 [101.5]	0.57 [82.7]
4 x SX42	0.7 [101.5]	0.63 [91.4]

Notice

- The quality of the compressed air shall fulfill the requirements in DIN ISO 8573-1 class 4.
- When working in environments with dust, dirt and larger particles that could jam the ejector unit and cause impaired performance, it is recommended to use piCOBOT® L HP with gripping tools, such as suction cups or grippers, that are equipped with filters.

4.4.2. Pneumatic diagram

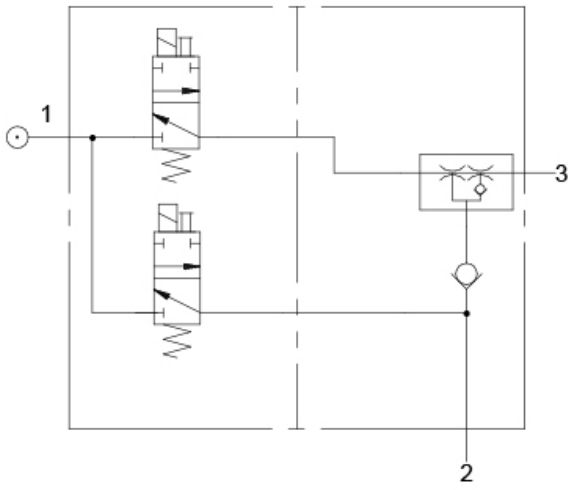

1. Compressed air
2. Vacuum
3. Exhaust

Figure 7. Vacuum NC and Blow-Off NC, with non-return valve

5. Operation

The LED will light up in different colors and with steady on or flashing light depending on which task is performed. The two LEDs are located on opposite sides of piCOBOT® L HP.

Task/Activity	Color
Vacuum ON	Blue, flashing
ES Active	Blue, steady
Idle	Green, steady
Release (Blow-Off Active)	Green, flashing

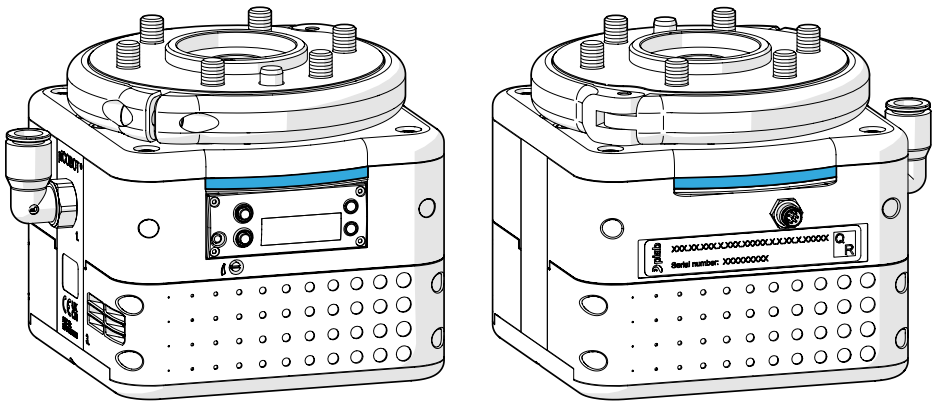

5.1. Interface

There are two buttons, one OLED screen and two LEDs in green and blue on the piCOBOT® L HP. As soon as the piCOBOT® L HP is turned on, the Piab logo is shown and shortly after the default screen (see picture below, showing the status IDLE with 0.0 -kPa vacuum). The real time vacuum level reading is displayed here when vacuum is achieved. The selected and active vacuum unit is shown in the bottom far-right corner. A screen saver is activated after 3 minutes if no signal in is present or when working in the menu settings.

The blue LED L1 will light and IDLE will switch to VAC in the display when an incoming signal for *Vacuum on* is achieved. Likewise, for a *Blow-Off on* signal but then the green LED L2 is lit and IDLE switches to BO in the display. It is also possible to manually operate *Vacuum on* or *Blow-Off on* with the buttons “V” (*Vacuum on*) and “B” (*Blow-Off on*) when the piCOBOT® L HP is powered with 24V. Blow-Off on will always override Vacuum on.

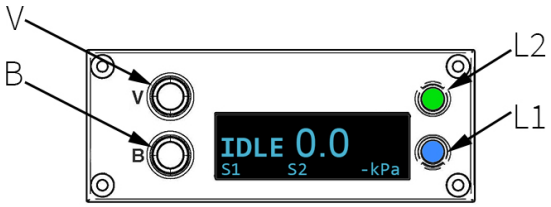

The information in the bottom of the display shows, from left to right, the output signal status on S1, normally Part Present (PP); S2, normally Energy Saving (ES) level achieved; and the active vacuum unit. The

top left section in the display will show status conditions, e.g. when and which ES-Energy Saving function or which Blow-Off type is active and in action. The output signals and status conditions can represent different selectable features, for more info see the Menu overview and Menu setting on the coming pages.

To enter the menus, press and hold “V” and “B” at the same time for 2 seconds. A small time-bar on the top of the display will gradually go from left to right until menus appear.

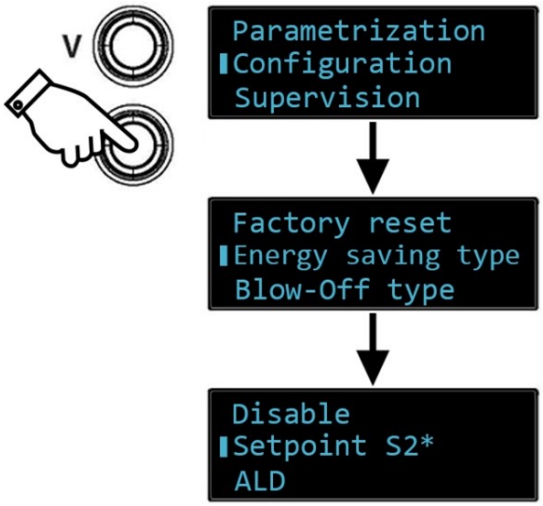

To navigate the menus, push “B” to toggle down and “V” to toggle up the list. Hold to scroll the list. Set your choice to the square marker and press both “V” and “B” at the same time. To select and set a value or choice in a menu, toggle to the square marker and press “V” and “B” at the same time again. Your choice is marked with * and the OLED will quickly blink to confirm your setting. In the Parametrization menu wait for 2 seconds to leave the entered menu. All other menus have a “Back” function at the bottom of different selections. After 10 seconds without new input the screen automatically returns to its default position.

5.2. Blow-Off flow

The Blow-Off flow can be adjusted with the Blow-Off screw. The Blow-Off flow decreases when turning the screw clockwise and increases when turning the screw counter-clockwise. A high flow will release quickly but may cause light parts to move when released. A low flow will release more slowly but may be unnecessarily slow for heavy parts.

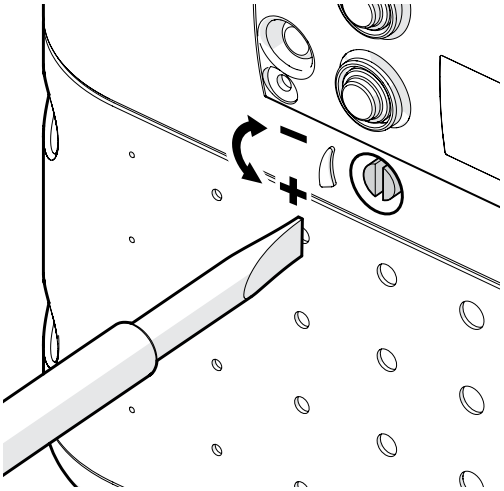

5.3. Menu overview piCOBOT® L HP General

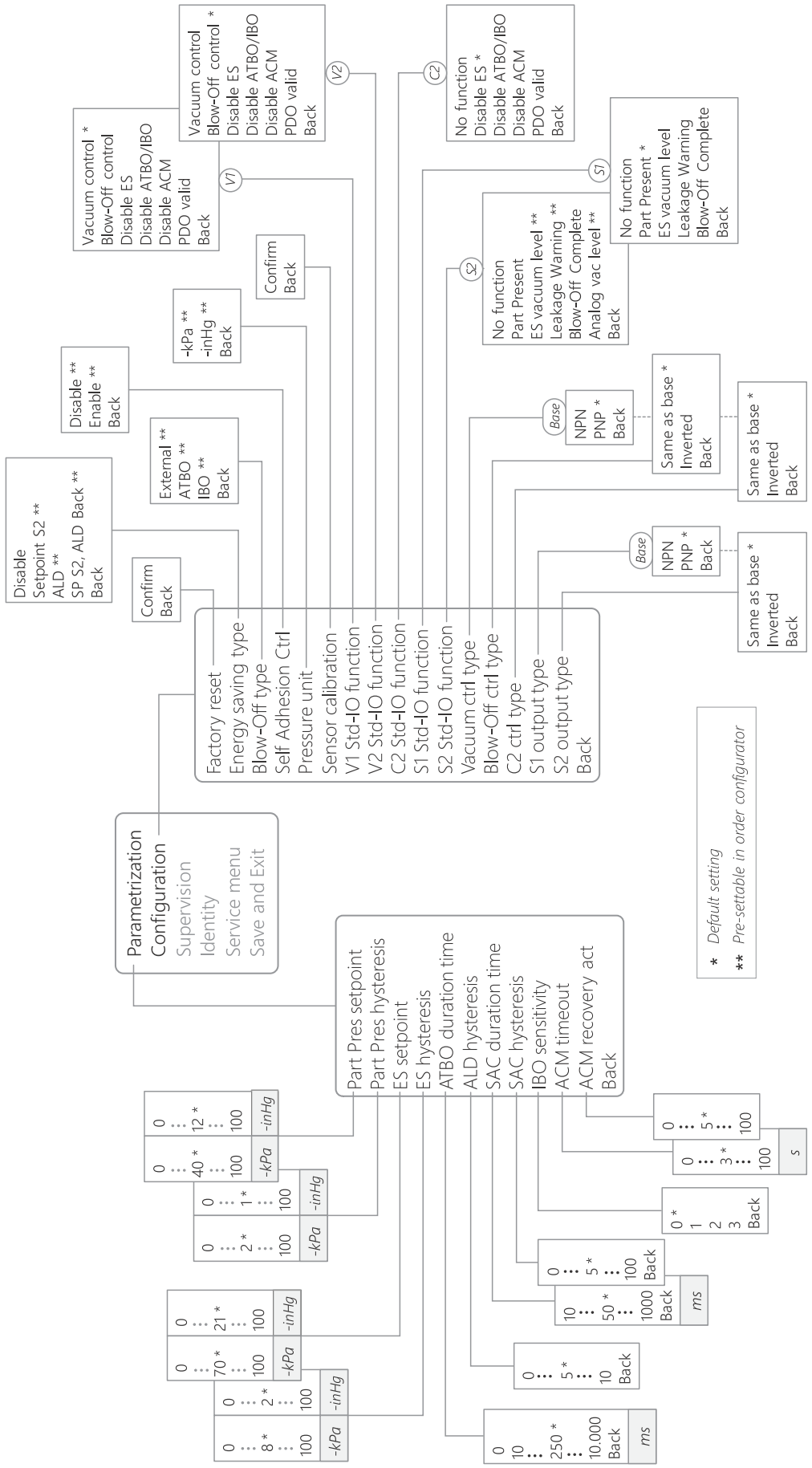

5.4. Menu settings

Parametrization

Menu name	Preset value	Range	Unit	Comment
Part Present vacuum level set-point	40	0...100	-kPa [-inHg]	Normally used as Part present level
Part Present hysteresis	2	0...100	-	-
Energy Saving (ES) vacuum level setpoint	70	0...100	-	Normally used as Energy Saving trigger level
Energy Saving (ES) hysteresis	8	0...100	-	-
ATBO duration time	250	0...10000	ms	Time set for ATBO
ALD hysteresis	5	0...10	-	ALD tuning
SAC duration time	50	0...1000	ms	Time set for SAC
SAC hysteresis	5	0...100	-	SAC tuning
IBO sensitivity	0	0...3	-	0 = Small vacuum system
ACM timeout	5	1...100	s	Time for all recovery actuations
ALD recovery actuations	3	1...100	pcs	Number of allowed recovery actuations

Configuration

Menu name	Configuration	Comment
Factory reset	Confirm	Returns unit back to factory set of parameterization and configuration values based on product CODE.
Energy Saving type	ES disabled ES on setpoint 2 ES with ALD ES on setpoint 2 - ALD backup	Preset depending on configuration. See corresponding chapter Function.
Blow-Off type	External ATBO IBO	Preset depending on configuration. See corresponding chapter Function.
Self Adhesion Control	SAC disabled SAC activated	Preset depending on configuration.
Pressure unit	-kPa -inHg	-
Sensor calibration	Confirm	Resets and calibrates the analog sensor.
V1 function	Vacuum control Blow-Off control Disable ES Disable ATBO/IBO Disable ACM PDO valid	V1, valve control is normally used and always preset to vacuum control. Preset depending on configuration. See corresponding chapter Function.
V2 function	Vacuum control Blow-Off control Disable ES Disable ATBO/IBO Disable ACM PDO valid	V2, valve control is normally used and always preset to Blow-Off control. See corresponding chapter Function.
C2 function	Vacuum control Disable ES Disable ATBO/IBO Disable ACM PDO valid	See corresponding chapter Function.
S1 function	No function Part present vacuum level achieved (PP) Energy Saving vacuum level achieved (ES) Leakage Warning (LW) Blow-Off complete (BOC)	S1, feedback signal is normally used and preset to Part Present. See corresponding chapter Function.
S2 function	No function Energy Saving vacuum level achieved (ES) Part present vacuum level achieved (PP) Leakage Warning (LW) Blow-Off complete (BOC) Analog vacuum level (1-5V)	S2, feedback signal is normally used and preset to Energy Saving trigger depending on configuration. See corresponding chapter Function. Analogue signal is continuous from 1 to 5 V.
Vacuum control type	NPN PNP	Base input.

Menu name	Configuration	Comment
Blow-Off control type	Same as base Inverted from base	Follows the base Vacuum control type.
C2 control type	Same as base Inverted from base	Follows the base Vacuum control type.
S1 output type	NPN PNP	Base output.
S2 output type	Same as base Inverted from base	Follows the base S1 output type.

Supervision

Menu name	Function	Unit	Comment
Cycle counter	Cycle counter	Cycles	See corresponding chapter Function.
UVD counter	Under Voltage Detection (UVD) counter	pcs	See corresponding chapter Function.
MAX volt	Highest Voltage Detected (MVD)	V	See corresponding chapter Function.
MIN volt	Lowest Voltage Detected (LVD)	V	See corresponding chapter Function.
SYS volt	System Voltage	V	See corresponding chapter Function.
MAX Acc	Short Term Maximum Acceleration (STMA)	g x 10	See corresponding chapter Function.
MAX Acc 2	Life Term Maximum Acceleration (LTMA)	g x 10	See corresponding chapter Function.
MAX temp	Maximum Temperature Detected (MTD)	°C	See corresponding chapter Function.
SYS temp	System Temperature	°C	See corresponding chapter Function.

Identity

Menu name	Comment
Vendor ID	PIAB VENDOR ID
Device ID	E.g. 314, see your pump for the correct value
Vendor	Piab AB
Product name	piCOBOT® L HP
Serial number	E.g. 16Q001234, see your pump for the correct value
Hardware revision (HW)	E.g. R02, see your pump for the correct value
Firmware revision (FW)	E.g. revision 1.0
Application TAG	Application TAG Example
Production date	E.g. 2019-02-20

Service menu

Menu name	Comment
Piab lock	For Piab developers only.

6. Functions

NOTE! Some functions are optional and chosen when configuring the piCOBOT® L HP for purchase. These functions are denoted with *optional*.

6.1. Parametrization and configuration

Vacuum control

Vacuum_control is controlled through SIO input (PNP or NPN, configurable). For a normally closed pump, vacuum is activated by an “active” input signal. For a normally open pump, vacuum is turned off by an “active” input signal. You can set the PNP/NPN interpretation of pump I/O in the configuration menu by changing the control type and output types. You can also invert the interpretation PNP to NPN or NPN to PNP following the Base by connecting pin 7 to pin 2 (GND). See electrical charts below.

Pump equipped with an PNP/PNP or NPN/NPN In-/ Out-puts. (Default is PNP/PNP-mode).

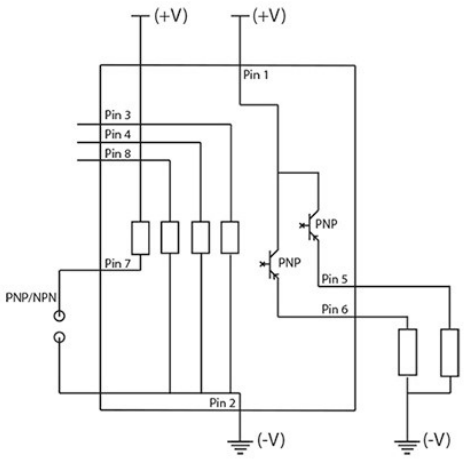

Figure 8. PNP/PNP-mode. Selectable using menu settings in your pump or connect to pin 7 to pin 2 (GND), see Operation.

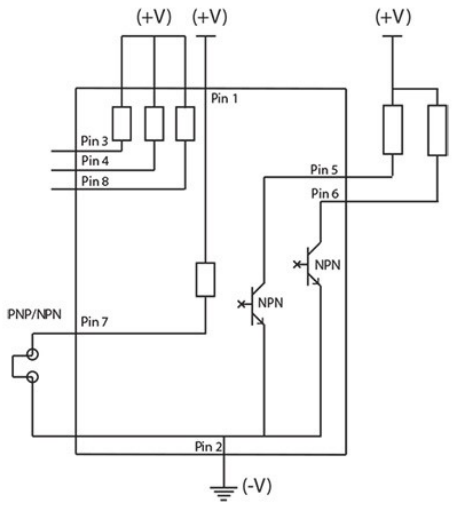

Figure 9. NPN/NPN-mode. Selectable using menu settings in your pump or connect to pin 7 to pin 2 (GND), see Operation.

Pump equipped with mixed mode (PNP/NPN or NPN/PNP In-/Out-puts). (Default is PNP/NPN-mode).

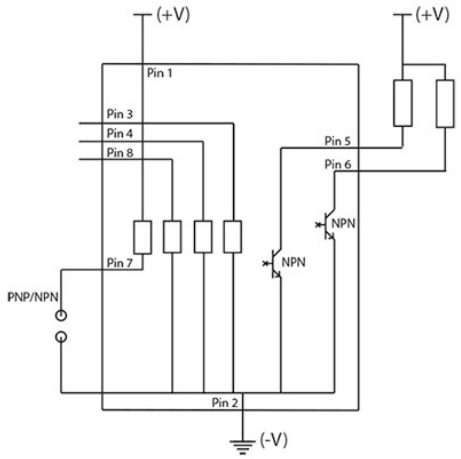

Figure 10. Mixed mode PNP/NPN.

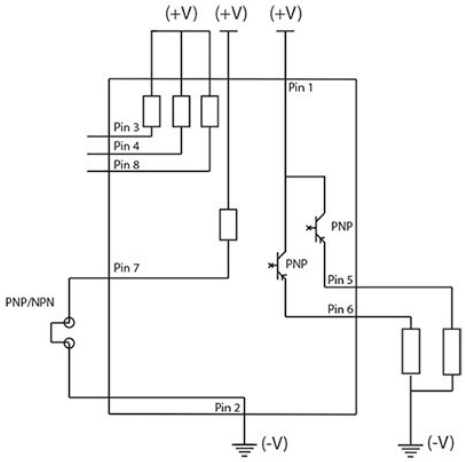

Figure 11. Mixed mode NPN/PNP. Selectable using menu settings in your pump or connect to pin 7 to pin 2 (GND), see Operation.

Energy Saving Type: Energy Saving – Automatic Level Determination (ALD)

Automatic “ES” Level Determination (ALD) Optional only if ES-mode is active and energy saving type ALD is selected. The unit will measure maximum achievable vacuum on the object every cycle and automatically set an optimized ES level and hysteresis- The calculation is re-calculated every cycle to give the most reliable condition every time a new object is handled. The calculation is based on set part present signal level and maximum achievable vacuum measured by an analog sensor. ALD can also be selected as a back-up for manually set ES (setpoint S2). In this case, ALD will be activated if S2 is not reached in order to always secure energy saving.

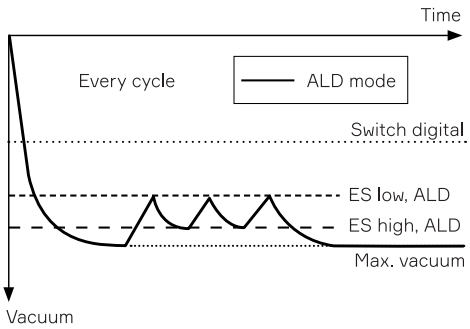

Parameter	Description
ALD hysteresis	Range 0 .. 10, where 0 = small hysteresis and 10 = large hysteresis.

Energy Saving Type: Energy Saving on setpoint S2 (Manual settings)

Energy Saving (ES) on setpoint S2 will operate the same way as Energy Saving ALD, with the only difference that the user needs to provide a value at which the unit will turn off, and a hysteresis (difference window) until the unit will turn vacuum on again. The value at which the unit will turn off vacuum generation is set in parameter S2 (ES setpoint). The difference (hysteresis) is set using parameter ES hysteresis. ES “low”, when unit turn vacuum on, is then internally calculated as (ES setpoint – ES hysteresis).

Parameter	Description
ES setpoint	Range 0 .. 100 -kPa [0 .. 29.5 -inHg]. S2>S1
ES hysteresis	Range 0 .. 100 -kPa [0 .. 29.5 -inHg]. Ensure that S2_setpoint - S2_hysteresis>S1

S1 and S2, feedback signal where in Std-IO ...

Automatic “ES” Condition Monitoring (ACM)

Optional only if ES-mode is active to protect the life span of the valves, an automatic override function is implemented. If the supply valve is restarted 3 times within 3 seconds, the ES function is deactivated for the rest of the cycle. A nice feature if leakage occasionally occurs. If your product is configured or set with a leakage warning output the feature can also be used to monitor the wear of the suction cups. You can disable the ACM function by activating the digital input C2 on pin8 (Std-IO) or PDO OCTET0 Bit4 (IO-Link). If you discover a leak in the system, you can temporarily turn off the ACM function by pushing once on either of the manual override buttons on the valve unit. The pump unit will then recharge vacuum in its ES hysteresis range, turn OFF to ON and tries to go into ES-mode when you have found the leak. Then the pump turns off and goes into ES-mode. Recycle the pump or push once again on any of the manual override buttons to activate the ACM mode again.

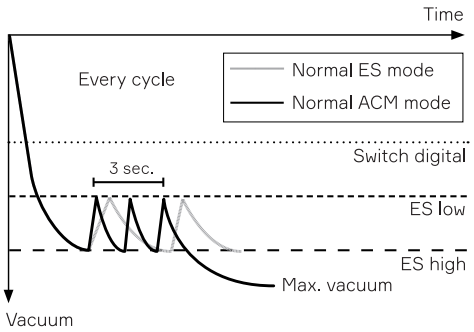

Parameter	Description
ACM Timeout	Range 1 .. 100. unit = seconds. The minimum time (default 3 seconds) that must pass during which the ACM recovery actuations occur. If the time is longer for 3 (or whatever is set) actuations, the ACM function is not triggered. If the time is shorter, the ACM function is triggered. Can also be selected as an output option for S1 or S2.
ACM Recovery actuations	The number of recovery actuations (default = 2) that are allowed to occur within the ACM timeout without triggering the ACM function.

Leakage Warning (LW)

Output signal that is activated from the ACM. Every time ACM is triggered, this indicates a leakage which can be transmitted on S1 or S2 signal port.

Blow-Off control

Blow-Off is controlled either through SIO input (PNP or NPN, configurable). Blow-Off (always pneumatically normally closed) is activated by an “active” input signal. Active Blow-Off control will always override Vacuum control, terminating the vacuum generation and starting the Blow-Off. For related information, see Vacuum control on previous page.

Blow-Off type: External control (optional)

External control means that compressed air release function will start by an “active” input signal. The Blow-Off signal will override the vacuum signal as well as ATBO or IBO when it’s active.

Blow-Off type: Automatic Timer Blow-Off (ATBO) (optional)

Automatic Timer Blow-Off (ATBO) means that the compressed air release function will start automatically after the vacuum valve is turned off. The Blow-Off duration is set with a timer. ATBO will save on I/Os needed to control the product, can be of great importance if several units are connected to one controller. ATBO makes programming easier and can be used to fine-tune Blow-Off duration to cut cycles time.

Parameter	Description
ATBO Timer	Sets the duration of the Blow-Off in milliseconds. Range 0 .. 10 000 milliseconds.

Blow-Off type: Intelligent Blow-Off (IBO) (optional)

Intelligent Blow-Off (IBO) is an alternative to save compressed air for part release, in many vacuum applications the big air consumer. Intelligent Blow- Off will start automatically when the vacuum valve is turned off, and the duration of the Blow-Off is automatically adapted to the application. The Blow- Off duration is optimised, and blow-air will automatically stop when all vacuum is removed from the system. IBO is a self-learning function and only needs a few cycles to optimise Blow-Off duration for different system volumes. In the initial cycles, an extra Blow-Off puff can be presented to fully remove vacuum. IBO-sensitivity - can be used to tune sensitivity for IBO depending on the size of the vacuum system.

Parameter	Description
IBO sensitivity	0 = Small vacuum system 1 = Medium vacuum system 2 = Large vacuum system 3 = Large vacuum system - large pressure drops

Low number = most energy efficient Blow-Off (suitable for small vacuum system. The higher the number the larger or more flow-restricted the system.

Self Adhesion Control (SAC) (optional)

Self Adhesion Control (SAC) automatically removes “unwanted” vacuum with short blow puffs if the product's vacuum control valve has not been activated. The puff duration is set with a timer in milliseconds. The hysteresis (or sensitivity) is set with a value from 0 – 100. A lower value gives a more sensitive SAC. Unwanted vacuum is typically created by an ergonomic vacuum handling device/ manipulator where a vacuum check/non-return valve is included. For example, ejectors with ES feature have a check/non-return valve inside. When suction cups are applied against a sealed object, the weight of the handling device compresses the cups and create a small bonding force. The force can be enough to move the object in an uncontrolled manner and even cause personal injuries if glass or metal sheets with sharp edges are handled. SAC will eliminate this problem completely. Selectable function.

Parameter	Description
SAC duration	Time for one Blow-Off puff in milliseconds (range 10..10 000) Default value = 50 ms.
SAC hysteresis	Low value = sensitive system for very light handled object, but at the risk of "ghost-puffs due to signal drift/disturbance. High value = robust but not as responsive system.

Blow-Off Complete (BOC)

Output signal that is activated when Blow-Off is Complete, if an integrated automatic Blow-Off function, ATBO or IBO, is activated. The trigger output data will make it very easy to always program for fastest possible cycle-time. A proper use of a parameter is to initiate part release by setting the vacuum control signal to “OFF”, wait for BOC to turn “HIGH”, indicating that part has been released.

Parameter	Description
The BOC signal is indirectly affected by parameter IBO sensitivity. See chapter on Intelligent Blow-Off.	IBO sensitivity is described separately.

V1 Standard-IO function

Selects how input mode on V1 Standard-IO-pin shall be interpreted.

Parameter	Description
Blow-Off control	Blow-Off control
Vacuum control	Vacuum control
Disable ES	Set pin to HIGH --> Disables Energy Saving Function and its derivative function Leakage Warning.
Disable ATBO/ IBO	Set pin to HIGH --> Disables Automatic Timer Blow-Off or Intelligent Blow-Off.
Disable ACM	Set pin to HIGH --> Disables Automatic Condition Monitoring (the valve protection is disabled).
PDO Valid	Activate to indicate that control signals are valid. Useful for Standard IO. Similar function as complement ctrl status bit used in IO-link.

V2 Standard-IO function

Selects how input mode on V2 Standard-IO-pin shall be interpreted.

Parameter	Description
Blow-Off control	Blow-Off control
Vacuum control	Vacuum control
Disable ES	Set pin to HIGH --> Disables Energy Saving Function and its derivative function Leakage Warning.
Disable ATBO/ IBO	Set pin to HIGH --> Disables Automatic Timer Blow-Off or Intelligent Blow-Off.
Disable ACM	Set pin to HIGH --> Disables Automatic Condition Monitoring (the valve protection is disabled).
PDO Valid	Activate to indicate that control signals are valid. Useful for Standard IO. Similar function as complement ctrl status bit used in IO-link.

S1 Standard-IO function

Selects which state to transmit on SIO output S1.

Parameter	Description
Part Present (PP)	Part Present vacuum level achieved. Vacuum Switch level S1 achieved.
Energy Saving vacuum level (ES)	Energy Saving vacuum level achieved. Vacuum Switch level S1 achieved.
Leakage Warning (LW)	Every time ACM is triggered, this indicates a leakage which can be transmitted on S1 signal port.
Blow-Off Complete (BOC)	The automatic Blow-Off sequence is completed.

S2 Standard-IO function

Selects which state to transmit on SIO output S2.

Parameter	Description
Part Present (PP)	Part Present vacuum level achieved. Vacuum Switch level S2 achieved.
Energy Saving vacuum level (ES)	Energy Saving vacuum level achieved. Vacuum Switch level S2 achieved.
Leakage Warning (LW)	Every time ACM is triggered, this indicates a leakage which can be transmitted on S2 signal port.
Blow-Off Complete (BOC)	The automatic Blow-Off sequence is completed.
Analog vacuum level	1-5 V

C2 Standard-IO function

Selects how input mode on C2 Standard-IO-pin shall be interpreted.

Parameter	Description
No function	Default no function on pin.
Disable ES	Set pin to HIGH --> Disables Energy Saving Function and its derivative function Leakage Warning.
Disable ATBO/IBO	Set pin to HIGH --> Disables Automatic Timer Blow-Off or Intelligent Blow-Off.
Disable ACM	Set pin to HIGH --> Disables Automatic Condition Monitoring (the valve protection is disabled).
PDO Valid	Activate to indicate that ctrl signals are valid. Useful for Standard IO. Similar function as complement ctrl status bit used in IO-link.

Vacuum control type

This setting is considered the base pump input type of the pump (PNP or NPN).

Parameter	Description
NPN	NPN function of Vacuum control input pin (and all other input pins unless specifically configured otherwise.
PNP	PNP function of Vacuum control input pin (and all other input pins unless specifically configured otherwise.

Blow-Off control type

Parameter	Description
Same as base input type	Sets the input type to operate PNP when base input type is PNP. NPN when base is NPN.
Input type inverted	Sets the input type to operate NPN when base input type is PNP. PNP when base is NPN. This function can be useful when configuring a system that which you want to behave in a specific manner during power-up for example.

C2 control type

Parameter	Description
NPN	NPN function of S1 output signal pin (and all other output pins unless specifically configured otherwise.
PNP	PNP function of S1 output signal pin (and all other output pins unless specifically configured otherwise.

S1 output type

S1 feedback signal. This setting is considered the base output type of the pump (PNP or NPN).

Parameter	Description
NPN	NPN function of Vacuum control input pin (and all other input pins unless specifically configured otherwise.
PNP	PNP function of Vacuum control input pin (and all other input pins unless specifically configured otherwise.

S2 output type

Parameter	Description
Same as base input type	Sets the output type to operate PNP when base input type is PNP. NPN when base is NPN.
Input type inverted	Sets the input type to operate NPN when base input type is PNP. PNP when base is NPN.

6.2. Supervision

Cycle counter

A cycle is counted every time Vacuum on has been activated and then deactivated.

Under Voltage Detection (UVD) counter

UVD is a parameter that is measured during vacuum on, storing the lowest voltage recorded in the first 10 operating cycle after a power-cycle. Every powercycle generates a new reading to be stored locally. Up to 100 readings are possible to store, then a FIFO principle of replacement of data is applied.

Highest Voltage Detected (HVD)

HVD is a reading of the maximum voltage seen by the vacuum-ejector over the lifespan of the ejector. The reading is a single value representing the highest voltage recorded.

Lowest Voltage Detected (LVD)

LVD is a reading of the lowest voltage seen by the vacuum-ejector over the lifespan of the ejector. The reading is a single value representing the lowest voltage recorded.

System Voltage

System Voltage is the latest real-time reading of voltage. A new reading is read and made available every time the ejector returns to IDLE – state.

Short Term Maximum Acceleration (STMA)

The pump measures and provides the maximum value of the sum-acceleration from the last 5 minutes of operation.

Life Term Maximum Acceleration (LTMA)

The pump shall be able to measure and report maximum acceleration the pump has been submitted to (while under power) throughout the lifespan of the pump.

Maximum Temperature Detected (MTD)

Is recording of the maximum temperature seen by the vacuum-ejector over the lifespan of the ejector.

System Temperature

This is the latest reading of system temperature. A new value is made available every time the ejector returns to IDLE – state.

6.3. Pin configuration

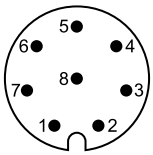

M8 8-pin male

Pin no	Color	Name	Description	Note
1*	White	V2	0=Vacuum control **1=Blow-Off control** 2=Disable Energy Saving (ES) 3=Disable Automatic Blow-Off functions (ATBO or IBO) 4=Disable Automatic Condition Monitoring (ACM) 5=Process Data Out valid (PDO)	Digital input Valve 2 control or C2 control functions
2*	Brown	S2**	0=No function **1=Energy Saving vacuum level achieved (ES)** 2=Part present vacuum level achieved (PP) **3=Leakage Warning (LW)** 4=Blow-Off Complete (BOC) **5=Analog output, 1-5 VDC**	Digital output Signal 2*
3*	Green	C2	0=No function **1=Disable Energy Saving (ES)** 2=Disable Automatic Blow-Off functions (ATBO or IBO) 3=Disable Automatic Condition Monitoring (ACM) 5=Process Data Out valid (PDO)	Digital input Control 2
4*	Yellow	V1	**0=Vacuum control** 1=Blow-Off control 2=Disable Energy Saving (ES) 3=Disable Automatic Blow-Off functions (ATBO or IBO) 4=Disable Automatic Condition Monitoring (ACM) 5=Process Data Out valid (PDO)	Digital input Valve 1 control or C2 control functions
5	Grey	Vsys	Supply voltage, 24 VDC (V+)	-
6*	Pink	C1	Invert interpretation of pump I/O, connect pin 6 to pin 8 to go from PNP to NPN or from NPN to PNP.	Digital input Control 1
7*	Blue	S1**	0=No function **1= Part present vacuum level achieved (PP)** 2= Energy Saving vacuum level achieved (ES) 3=Leakage Warning (LW) 4=Blow-Off Complete (BOC)	Digital output Signal 1*
8	Red	GND	Common, 0 VDC (V-)	-

Pin 1-4 and 7 can be configured in the menu system to do other functions, see chapter Functions for more information.

* Different operating alternatives depending on the piCOBOT® L HP configuration.

** S1 and S2 can deliver 2x40mA simultaneously or 1x80mA one at a time.

Bold text = Preset value (S2 offers different presets depending on the configuration).

7. Maintenance

Warning

- Irresponsible use of compressed air may cause injury. Compressed air must never be used for anything else than designated purposes.
- Prior to any maintenance work, turn off the compressed air supply and electrical supply, and discharge residual pressure.

The piCOBOT® L HP has been designed to minimize the need of maintenance. To ensure safe operation the following actions are strongly recommended to take:

- Maintenance must be performed with a fixed period short enough, to ensure a firm grip at all times.
- An overall inspection of the piCOBOT® L HP must be performed on a regular basis with a duration depending on the application characteristics.
- All maintenance must be performed in compliance with this manual, including safety instructions.
- Only authorized integrators, or Piab AB, shall perform repairs.
- Only use original spare parts.

7.1. Preventive maintenance

The following preventive maintenance actions are recommended to take:

Parts for maintenance	Item no	Action	Service action and/or inspection interval	Further action if unresolved
COAX cartridges SX12 and SX42	0202261, 0202262	Clean	When/if max vacuum* is reduced by >5 -kPa [1.48 -inHg].	Replace part if desired vacuum level is not achievable.
Foam gripper	See piab.com	Clean	Clean micro holes every month.	Replace with new foam.
Suction cups filter	See piab.com	Clean	When/if free running vacuum** increase is >5 -kPa [1.48 -inHg] or application failure.	Replace fitting and filter.
Suction cups	-	Inspect	When/if poor gripping performance.	Replace suction cup.
Compressed air filter	-	Clean with compressed air	Periodicity depending on the application but at every scheduled service stop.	-
Electrical cable	0222594	Inspect	After 500 installations/removals.	Replace cable.
External device: Compressed air regulator	-	Inspect and adjust feed pressure to correct pressure level if needed (0.5 MPa [72.5 psi]).	When/if max vacuum* is reduced by >5 -kPa [1.48 -inHg].	Check compressor condition, capacity and potential compressed air system leakage.
External device: Power supply unit	-	Check the “System Voltage” warning issued on the OLED display.	Make sure that the supplied voltage to piCOBOT® L HP is within the specified range (24 VDC ± 10%). Below 21.6 VDC no proper function is guaranteed.	Size up power supply or make sure it is not overloaded at any time.

* Max vacuum is the vacuum level achieved by suction cups on a sealed work object.

** Free running vacuum is the vacuum level displayed when the suction cups are not in contact with the work object and piCOBOT® L HP is generating vacuum.

7.2. Spare parts

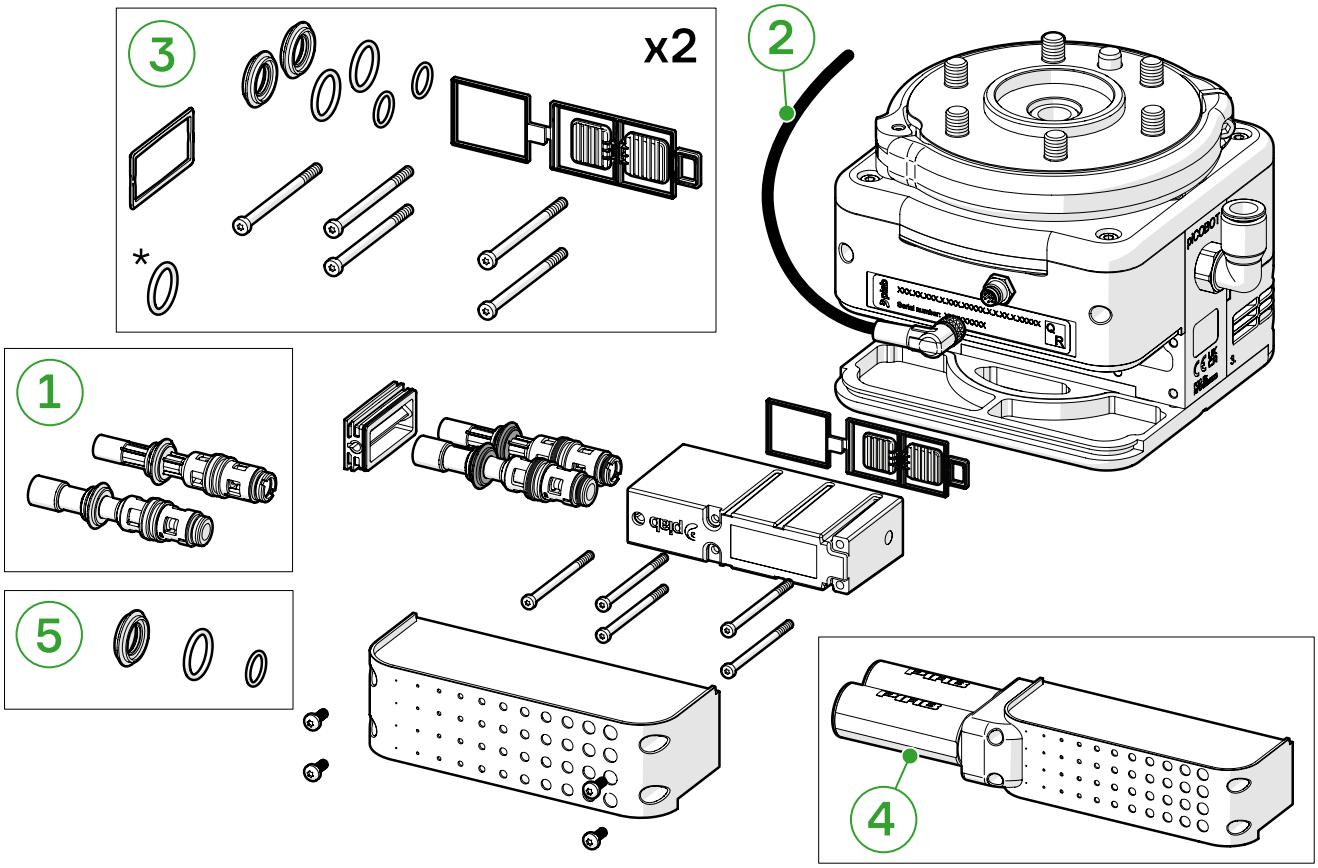

Position	Item number	Quantity	Description
1	0205575	1-4	COAX® cartridge SX12
1	0205724	1-4	COAX® cartridge SX42
2	0222594	1	Cable M8 8-pin Female Angled to Open end, length 3.0 m
3	0242665	1	Spare part kit piCOBOT® L (The O-ring denoted with * is for blind cartridge)
4	3216009	1-4	Silencer, G3/8” connection
5	0232669	1-4	Spare part kit COAX SX

7.3. Dismounting of chip

1. Unscrew and remove the safety cover (C), with a Torx T10 key.
2. Unscrew and pull out the chip house (A) from the pump, with a Torx T10 key.

A pump with 1 or 2 COAX® cartridges (F) has a single chip house, and a pump with 3 or 4 COAX® cartridges has two chip houses. The single chip house has a chip plug (a side cover plate H, seen in the box at the bottom left). The chip plug (H) is not present in the case of pumps with two chip houses.

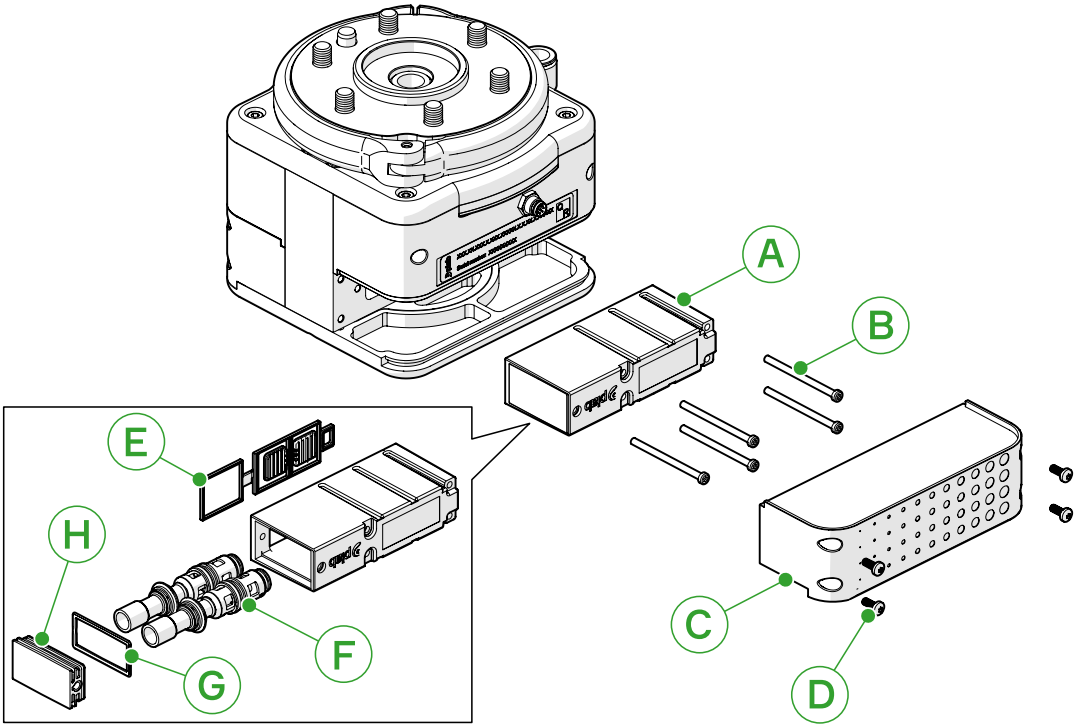

Figure 12. Pump with one chip house (1-2 COAX®).

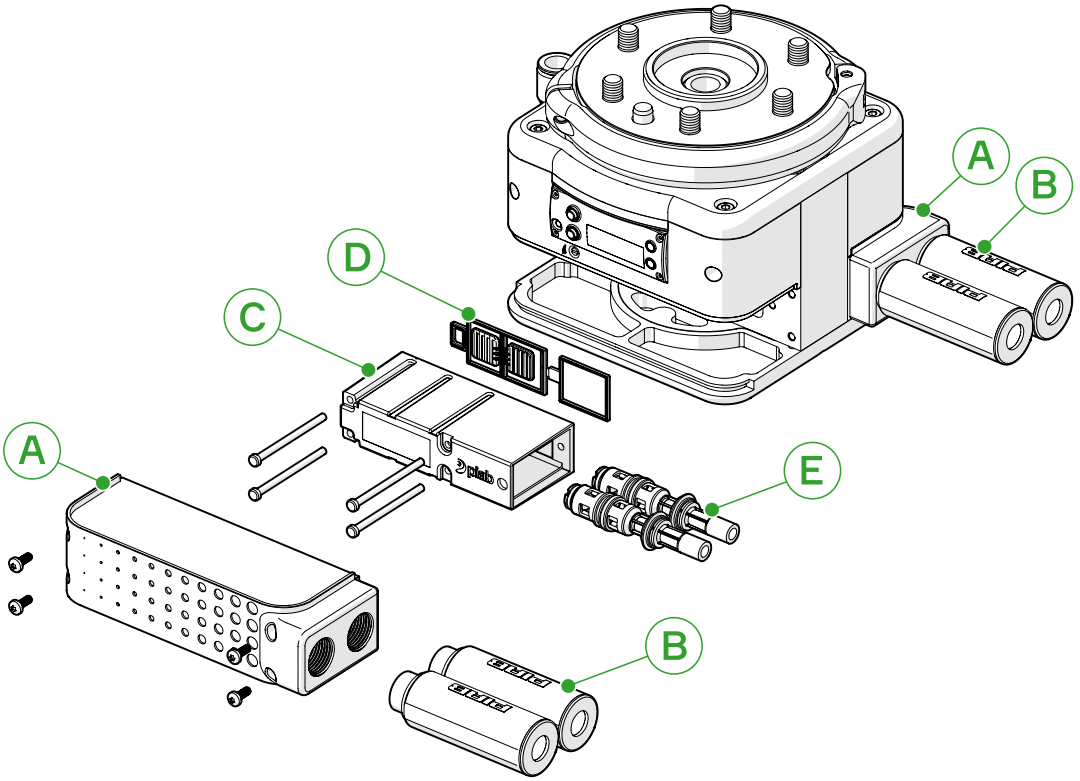

Figure 13. Pump with two chip houses (3-4 COAX®). Only one chip house is shown in the figure.

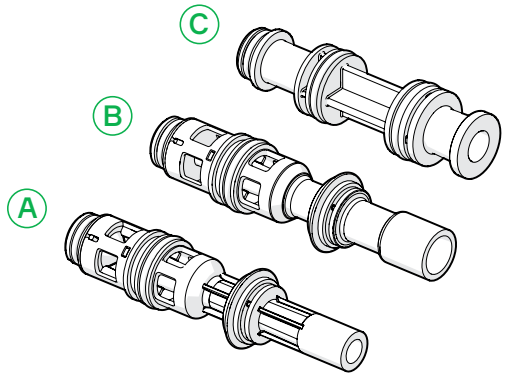

Figure 14. SX12 (A), SX42 (B) and blind (C) COAX® cartridge. If a pump with 1 or 3 COAX® is selected, a blind cartridge is put in the vacant slot in the chip house next to the COAX® cartridge.

7.4. Cleaning of compressed air filter

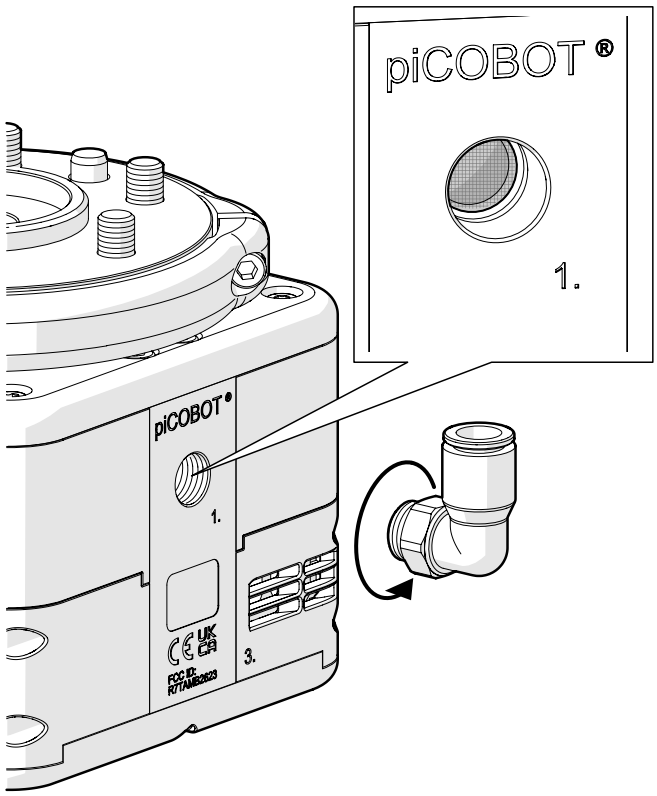

1. Use a wrench to unscrew the angled connector for compressed air.
2. Blow on the filter with compressed air to remove any dust or residues.
3. Screw the angled connector back in place using a wrench.

7.5. Troubleshooting

Observation or error	Subsystem	Actions	Comment
No vacuum in system	Pump	Inspect air supply connection.	-
	Pump	Inspect electrical connection.	-
	Pump	Inspect power supply.	Power supply is monitored on the display and shall be within 24 V ± 10%.
Poor vacuum in system	Pump	Clean COAX® cartridges.	-
	Pump	Inspect feed pressure filter.	Clean filter if needed, using compressed air.
	Pump	Check compressed air pressure drop.	Avoid too small hose inner diameter and too long hose.
	Pump	Check feed pressure.	Make sure compressed air feed pressure is according to recommendation.
	Suction cup	Check condition of suction cups.	Look for cracks and wear. Correct suction cup for the object?
	Suction cup	Clean filter in suction cups.	Clogged filter can manipulate "ready to go signal" in pump.
	Suction cup	Clean piSAVE® sense valve.	Enables "double pick" feature.
	General	Check O-ring sealing between pump and gripper.	Look for cracks and wear. Use correct torque for connection screws (4 screws).
Poor gripping	Pump	Adjust ES levels.	ES will shut off vacuum and too low level gives less lifting force.
	Suction cup	Check angle and adjustment on suction cups.	-
	Suction cup	Revise the choice of suction cup.	The gripping application might need other type of suction cups.
	Foam gripper	Clean micro holes.	-
	Foam gripper	Clean foam filter (for filter version grippers).	-
	General	Lift is too slow. Slow down lift, avoid acceleration peaks.	-
Ghost signal. S1 comes without object in contact	Suction cup	Clean filter in suction cups.	-
	Foam gripper	Clean micro holes.	-

Observation or error	Subsystem	Actions	Comment
Foam wears too quickly	Foam gripper	Reduce wear by gripping parallel to the work piece surface.	-

7.6. Accessories

Item no	Description
9967616	Foam gripper 140x140x20 mm, PCOF.140.140.N204.CV17.DM
9967667	Foam gripper 180x180x30 mm, PCOF.180.180.N314.FR6.DM
9967669	Foam gripper 300x200x30 mm, PCOF.300.200.N304.CV17.DM
9967671	Foam gripper 420x260x30 mm, PCOF.420.260.N304.CV17.DM

See the *piCOBOT® Foam Grippers* configurator for full configuration of foam grippers, on piab.com.

8. Technical Data

Description	Unit	Value
Installation		
Total weight (without suction cups)	g [oz]	See the configurable datasheet, available on piab.com, for the value of the particular configuration.
piCOBOT® weight (including adapter plate)	g [oz]	1520 [53.6]
Max. payload	kg [lb]	35 kg [77.2 lb]
Material	-	PA, NBR, SS, Al, FPM, CuZn, Cu, PU
Supply voltage	VDC	24 ± 10%
Connection, electrical	-	Connector M8 8-pin Male
Typical current consumption	mA	200
In rush current	mA	400
Valve shift peak current	mA	425
Valve shift peak current time	ms	<32
Feed pressure, max.	MPa [psi]	0.7 [101.5]
Feed pressure, optimum	MPa [psi]	See the pneumatic installation chapter.
Connection, compressed air	-	ø6, ø8, ø10 or 2xø10 mm push-in angle connector
Connection, vacuum	-	G1/2” Female
Environmental properties		
Safety classification	-	IP65
Temperature range	°C [°F]	0-40 [32-104]
Humidity	%RH	35-85
Vibration resistant at 2g xyz	Hz	8-200
Noise level range	dBA	See the configurable datasheet.
Operation		
Pressure drop	MPa [psi]	See the configurable datasheet.
Blow-Off flow at 0.5 MPa [72 psi] without counter pressure	Nl/s [scfm]	0-6.6 [0-13.98]
Hysteresis	-	Adjustable
Function, Vacuum/Blow-Off	-	NC vacuum + NC Blow-Off
Display	-	OLED and gyro display
Electrical input/output		
Electrical input/output	VDC	24, PNP/PNP or NPN/NPN
Analog output	V	0-5
Accuracy of full scale analogue output	-	±3%
Manual override, electrically activated	-	Yes, non-locking push style
Signal range (digital output)	kPa [inHg]	-101.3 - 140 [-29.92 - 41.34]
Valve response time	ms	23
Switch output S1/S2, max.	mA	2x40 simultaneously or 1x80 one at a time

9. Dimensions

9.1. 1-2 COAX®

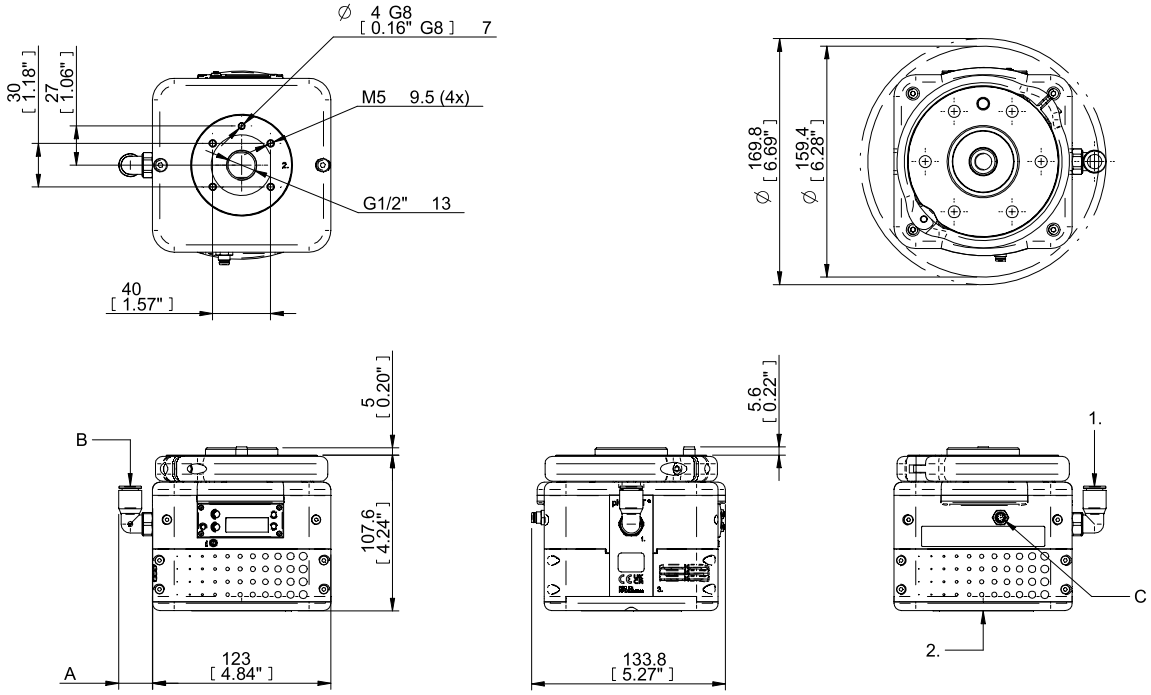

Position	Description
1	Compressed air
2	Vacuum
3	Exhaust

Description	Unit	Value
A - Compressed air supply width for different connections B	mm [in]	
C - Electrical connection	-	Connector M8 8-pin Male

9.2. 3-4 COAX®

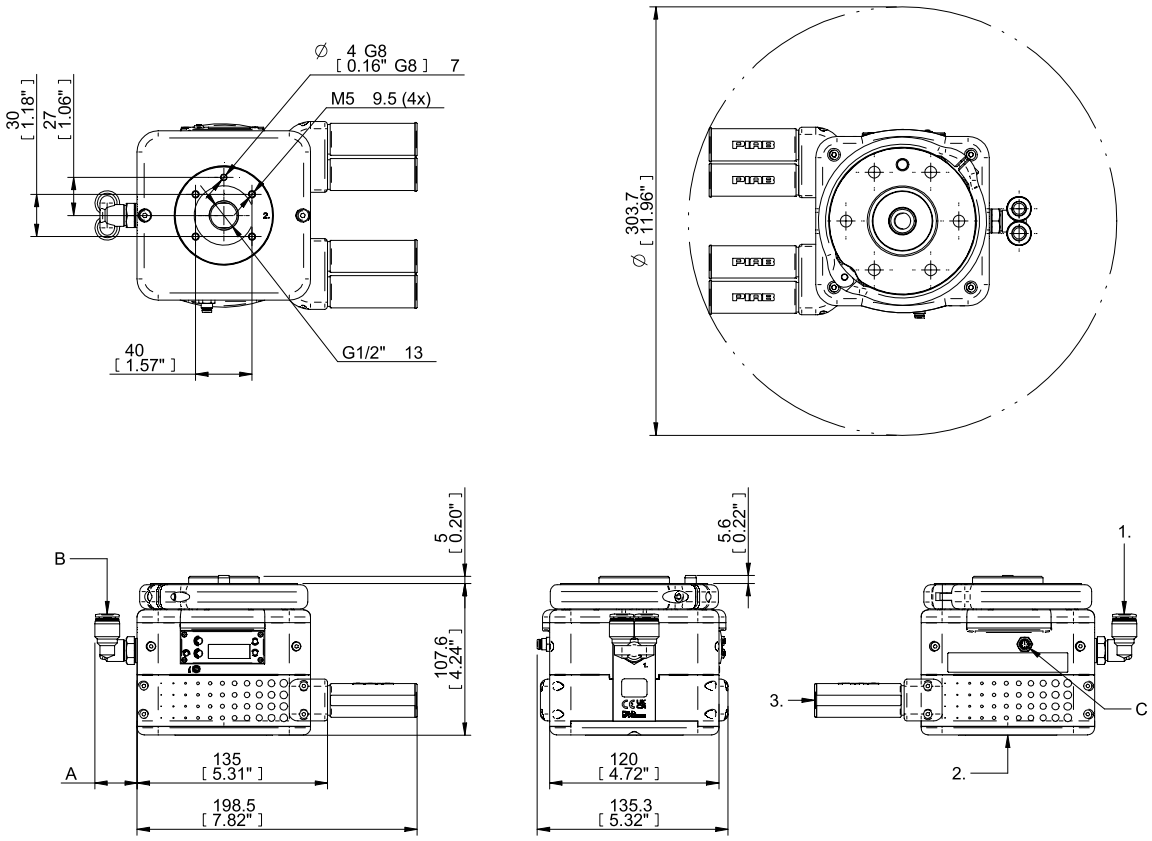

Position	Description
1	Compressed air
2	Vacuum
3	Exhaust

Description	Unit	Value
A - Compressed air supply width for different connections B	mm [in]	
C - Electrical connection	-	Connector M8 8-pin Male

9.3. Adapter plates

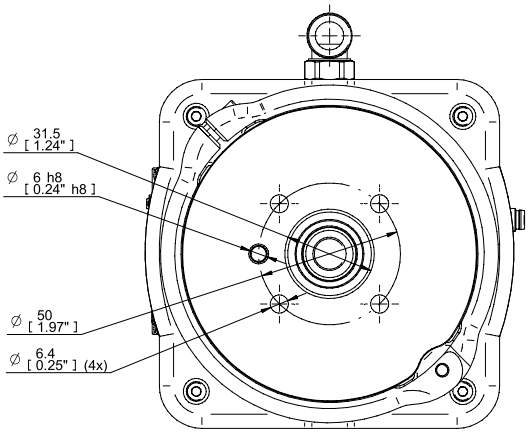

ISO 9409-1-50-4-M6

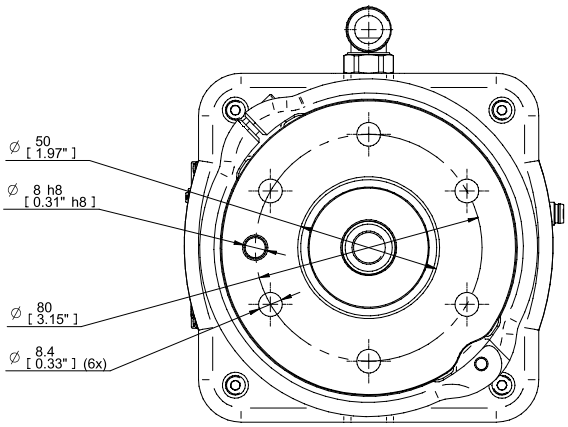

ISO 9409-1-80-6-M8

10. Warranty

The Seller gives its Customers a five-year warranty from the receipt of the Products for vacuum pump Products (excluding vacuum pumps with electronics/controls, electro-mechanical vacuum pumps, accessories, and controls).

The Seller gives its Customers a one-year warranty from the receipt of the Products for all other Products (i.e. excluding vacuum pump Products but including vacuum pumps with electronics/controls, electro-mechanical vacuum pumps, accessories, and controls) if the failure has occurred within the specified lifetime in terms of duty cycles as set out in the Product specification (if any).

The warranty covers manufacture and materials defects in the Products and it also covers if the Products do not conform to the Product specification, excluding minor defects, if reasonably acceptable and that do not compromise efficiency in their use.

The warranty does not apply to any Product (including any component or other parts in such Products (such as suction cups, filter elements, sealings, hoses, foam, etc.) or to the software of any Products) that it was used other than the intended purpose, and: (a) has been subjected to abuse, misuse, negligence, improper storage, improper handling, improper use, improper installation, abnormal physical stress, abnormal environmental or working conditions, or use, application, installation, care, control or maintenance contrary to any applicable manual or instructions for the Products issued by the Seller or good trade practice regarding the same; or (b) has been reconstructed, repaired or altered by any persons or entities other than the Seller or its authorized representatives, or have a defect as a result of fair wear and tear or willful damage or caused by subsequent damages caused by other defective products.

The product warranty set forth in this Section is the only warranty given by the Seller in relation to the Products. The Customer may not rely and has not relied, on any other information, statement, or warranty (express or implied), whether based on applicable law or otherwise. In any case, the compensation is limited to the price of the products agreed between the parties and is excluded from indirect damages.

During the warranty period, the Seller shall replace or repair, at its own expense, faulty products determined by the Seller, in its sole discretion, to be covered by the warranty set out herein.

It is at the Seller's discretion whether a faulty Product should be returned to the Seller for replacement or if it should be repaired by the Seller at the location of the Customer. Any replaced Products shall become the property of the Seller.

The Seller is not responsible for the cost of fitting replacement parts or components of any Products into any products or alike of the Customer.

These Terms and Conditions shall apply to any repaired or replaced Products by the Seller.

11. Recycling and disposal

Environmental aspects are considered in the development process of Piab's products to make sure that a minimal environmental footprint is used.

Piab AB is certified with ISO-14001:2015.

Piab AB also complies with:

- RoHS2 (2011/65/EU)
- REACH (EC 1907/2006)

The ways of handling recycling and disposal vary from country to country, and therefore this process needs to be in full compliance with each national regulation. If possible, disassemble the product into its various components. Electrical and electronic equipment should be handed over to an authorized body for disposal, as well as the metal parts. All other parts can either be recycled or sorted as waste.

For further information regarding REACH, visit https://www.piab.com/downloads/document-center-page

EUROPE

France
Lagny sur Marne
+33 (0)16-430 82 67
info-france@piab.com

Etampes (Joulin)
+33 (0)1 69 92 16 16

Germany
Butzbach
+49 (0)6033 7960 0
info-germany@piab.com

Italy
Torino
+39 011 226 36 66
info-italy@piab.com

Due Carrare (Kenos)
+39 049 874 13 84
info-italy@piab.com

Poland
Gdansk
+48 58 785 08 50
info-poland@piab.com

Spain
Barcelona
+34 (0)93-633 38 76
info-es@piab.com

Sweden
Danderyd (HQ)
+46 (0)8-630 25 00
info-sweden@piab.com
+46 544 409 00
se-sales@piab.com

Helsingborg
+46 042-400 45 80
se-sales@piab.com

Karlstad
+46 054 55 80 90
se-sales@piab.com

Mullsjö
+46 392 497 85
sales@avac.se

United Kingdom
Loughborough
+44 (0)15-098 570 10
info-uk@piab.com

AMERICAS

Brazil
Sao Paulo
+55 (0)11-4492 9050
info-brasil@piab.com

Canada
Toronto (ON)
Lifting Automation
+1 (0)905-881 16 33
eh.ca.info@piab.com

Canton (MA, US)
+1 800 321 7422
info-usa@piab.com

Mexico
Canton (MA, US)
+1 781 337 7309
info-mxca@piab.com

USA
Canton (MA)
+1 800 321 7422
info-usa@piab.com

Fairborn (OH)
Robotic Gripping
+1 888 727 3628
info-usa@piab.com

ASIA

China
Shanghai
+86 40 0897 8668
info-china@piab.com

India
Pune
+91 8939 15 11 69
info-india@piab.com

Japan
Tokyo
+81 3 6662 8118
info-japan@piab.com

Singapore
Singapore
+65 6455 7006
info-singapore@piab.com

piab – A brand by Piab Group

Art no. 0256729, Rev.01, en-GB, 2026-05 Original instructions.